SANSUI AU-70 SPECIFICATIONS

DC BIAS CURRENT

14mA~20mA

CONTINUOUS POWER

8Ω	20W	12.7V

GAIN AND INPUT LEVEL

	GAIN	INPUT
TAPE	80±2.5dB	1.20mV
MAG	79±2.5dB	1.35mV
X-TAC	52±2.5dB	30.2mV
MIC	79±2.5dB	1.35mV
AUX	46±5.2dB	60.0mV

RECORDING LEVEL

MAG. INPUT	REC. OUTPUT	DIN. J.K OUTPUT
1.54mV	40mV	48mV

PLAYBACK LEVEL

TAP. MON. INPUT	DIN. J.K INPUT	OUTPUT 8Ω
48mV	48mV	12.7V

MEMO

www.hifiengine.com

SANSUI AU-70 SCHEMATIC DIAGRAM

Sansui

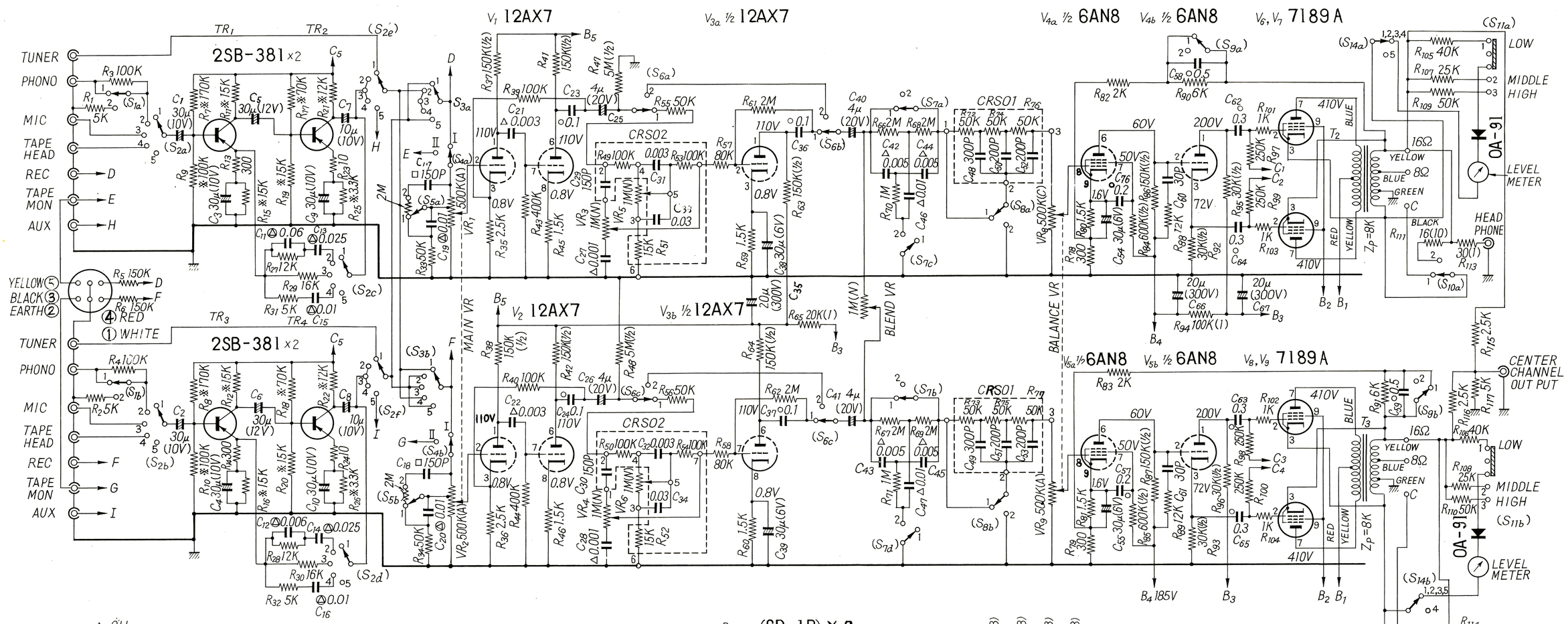

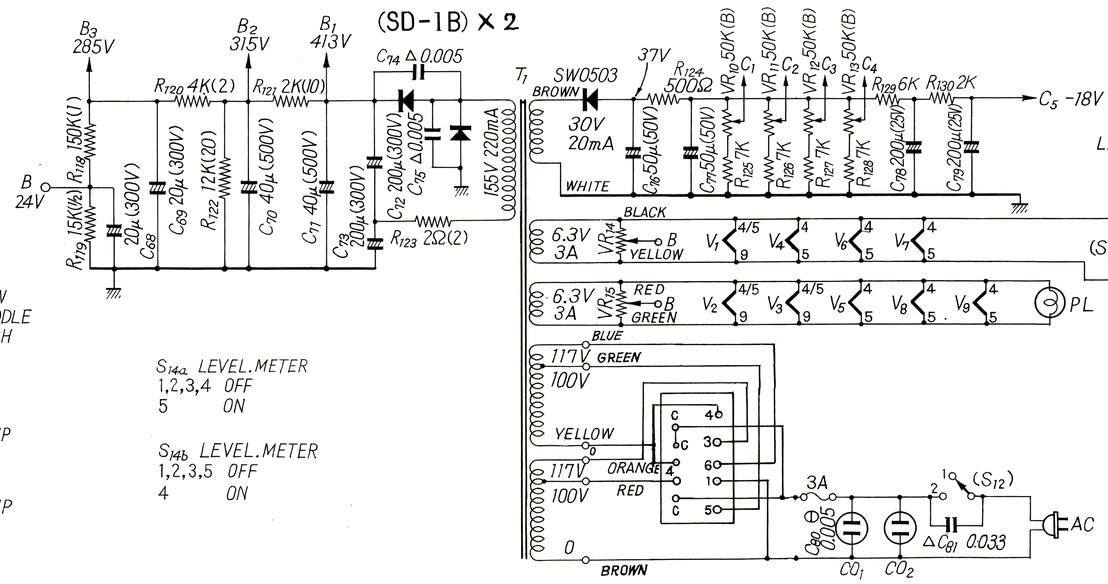

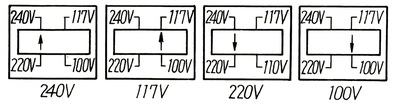

△ OIL
□ MICA
○ MP
Ⓐ MYLAR
※ NOISE LESS
○ CERAMIC

S_1 (a~b)
1 MAG
2 Xtal

S_2 (a~f) INPUT SELECTOR
1 TUNER
2 PHONO
3 MIC
4 TAPE
5 AUX

S_3 (a~c) MODE SELECTOR
1 REVERSE
2 NORMAL
3 MIX(R+L)
4 CHAN R
5 CHAN L

S_4 (a~b)
1 OFF
2 ON TAPE MONITOR

S_5 (a~b)
1 OFF
2 ON LOUDNESS

S_6 (a~d)
1 OFF
2 ON TONE DEFEAT

S_7 (a~d)
1 OFF
2 ON LOW FILTER

S_8 (a~b)
1 OFF
2 ON HIGH FILTER

S_9 (a~b)
1 OFF
2 ON PRESENCE

S_{10} (a~b)
1 ON
2 OFF SPEAKER

S_{11} (a~b)
1 LEVEL LOW
2 LEVEL MIDDLE
3 LEVEL HIGH

S_{12}
1 OFF
2 ON AC

S_{13a} PILOTLAMP
1,2,3,4 OFF
5 ON

S_{13b} PILOTLAMP
1,2,3,5 OFF
4 ON

S_{14a} LEVEL.METER
1,2,3,4 OFF
5 ON

S_{14b} LEVEL.METER
1,2,3,5 OFF
4 ON